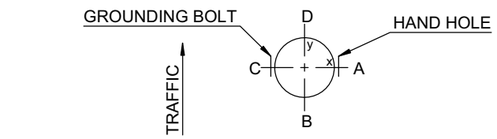

ORIENTATION

ITEM NO.	QTY	PART NUMBER	DESCRIPTION	MATERIAL	UNIT WEIGHT	TOTAL WEIGHT
1	1		12' RRFB POLE, SUBASSEMBLY		72.2	72.2
				PRODUCT WEIGHT (kg)=		72.2
2	1	P20-ST-B3X5-01	HAND HOLE COVER, OVAL, ONE HOLE, 3X5	CSA G40.21 300W	0.3	0.3
3	1	P04-01-ST-01	BACK BAR, 0.375" TAPPED HOLE, THK=0.250", WIDTH=1.50", L=140	CSA G40.21 300W	0.3	0.3
4	1	H10-SS-0.375X2.50-F	BOLT HEX, 3/8" x 2.50", STAINLESS STEEL, FULL THREAD	18-8 / TYPE316 SS	0.0	0.0
5	1	H10-SS-0.375X1.50-F	BOLT HEX, 3/8" x 1.50", STAINLESS STEEL, FULL THREAD	18-8 / TYPE316 SS	0.0	0.0
6	2	H40-SS-0.375	NUT, HEX, 3/8", STAINLESS STEEL	18-8 / TYPE316 SS	0.0	0.0
7	3	H70-SS-0.375	WASHER, FLAT, 3/8", STAINLESS STEEL	18-8 / TYPE316 SS	0.0	0.0
8	1	H71-SW-SS-0.375	WASHER, SERRATED, 3/8", STAINLESS STEEL	18-8 / TYPE316 SS	0.0	0.0
				KIT WEIGHT (kg)=		0.6

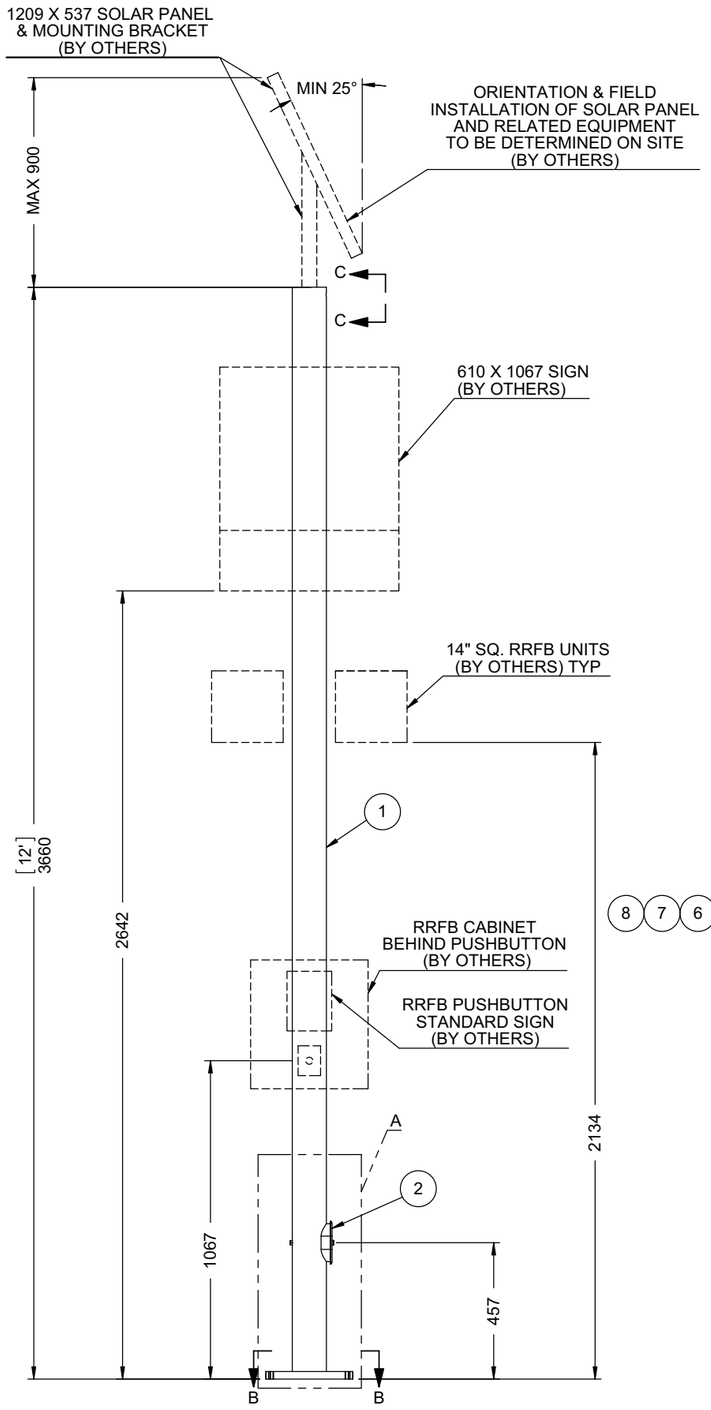

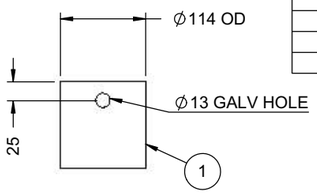

VIEW C-C

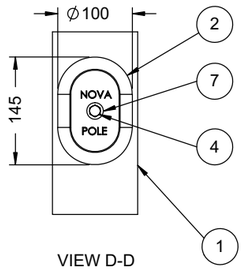

VIEW D-D

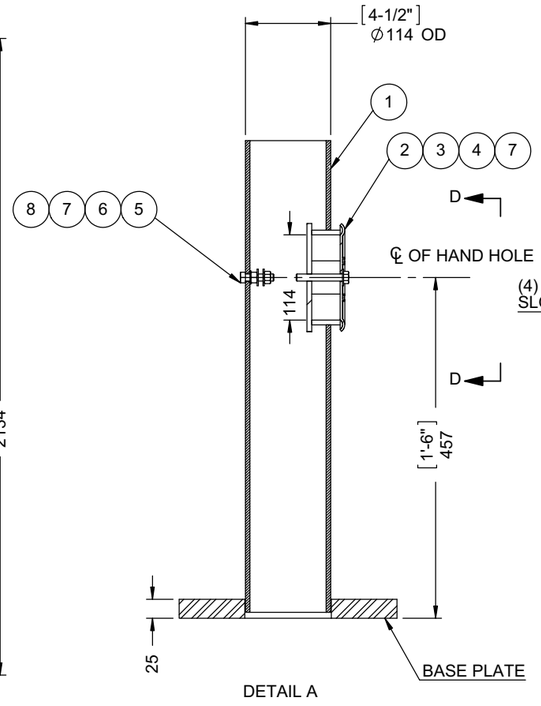

DETAIL A

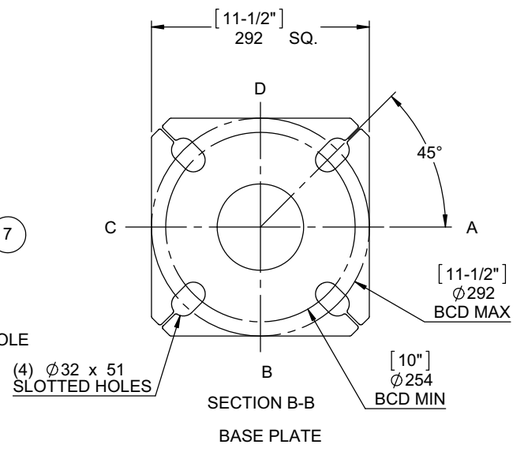

SECTION B-B

BASE PLATE

NOTES:

1. POLE (SUPPORTING ONE SOLAR PANEL 1209x537 AND MAX 25kg, ONE ELECTRICAL CABINET 17"x 15.5"x16" AND MAX 45kg, TWO 14" SQ. RRFB UNITS MAX 15kg EACH, BACK-TO-BACK 610x1067 PED CROSSWALK SIGNS, AND ONE RRFB PUSHBUTTON C/W STANDARD SIGN) IS DESIGNED IN ACCORDANCE WITH CITY OF EDMONTON ROAD & WALKWAY LIGHTING CONSTRUCTION AND MATERIAL STANDARDS 2013, FOR MAXIMUM 160km/h WIND GUST SPEED (GUST FACTOR INCLUDED)

POLE BASE REACTIONS (FACTORED, NO ICE)	
AXIAL	2.7 kN
SHEAR	4.0 kN
OVERTURNING MOMENT	12.0 kN

2. ALL UNITS IN METRIC (mm, kg) UNLESS OTHERWISE STATED.
3. STAMP BASE PLATE "NP YY" (YY=YEAR).
4. STEEL SILICON CONTENT:
   - SHAFT: Si < 0.04%
   - PARTS: Si < 0.04% OR 0.15% < Si < 0.22%
5. WELDING: CSA W59, W47.1
6. ANCHOR BOLTS: Ø1" ASTM F1554 GR. 55 MIN. (SUPPLY IF ORDERED)
7. FINISH: GALV ASTM A123.

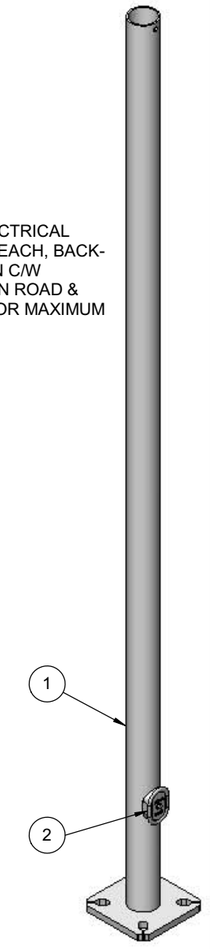

ISO VIEW

REV.	DESCRIPTION	DATE	DRAWN	APPRD
F	CHANGED TO REGULAR 3 X 5 HH	FEB 05, 2018	CV	PN
E	REVISED POLE LOADING	AUG 17, 2017	CV	PN

ENGINEERING SEAL

RELEASED DATE:	MAY 15, 2017
DRAWN BY:	CV
CHECKED BY:	PN
APPROVED BY:	PN
SPECIFICATION	

NOVA POLE

CITY OF EDMONTON

12' RRFB POLE (4 1/2" OD)

-

SPEC # -	JOB #	SIZE	SCALE	
REF # CR20170206	SO26238	B	NTS	SHEET 1 OF 1
PRODUCT #	DWG #			REV.
103-70-SRRRFB-F	2-110-12547-F			F